COOL HEAD

DRINKS | Countertop Cabinets

DRINK COOLER ▶ UPRIGHT COOLERS

DC 55B

CUSTOMIZATION AVAILABLE
PERSONALIZZAZIONE DISPONIBILE

+2° | +10°

35 mm | K4 +1°C +9°C | E ENERGY CLASS | CC1 +25°C 60RH | LED | GAS R600a

DETAILS

Digital thermometer

Inner LED light

Lock fitted as standard

Customization available

Independent light switches for inner light

Handle along door profile

GENERAL FEATURES

55 Lt. Upright drink cooler	•
External in black coated plate, black thermoformed internally	•
Roll-bond evaporator system with fan assisted cooling	•
Manual Defrost	•
Foaming Agent Cyclopentane (35mm per side)	•
Removable Gasket	•
Double layer safety tempered glass	•
Lock fitted as standard	•
Inner vertical LED light	•
Independent light switches for inner light	•
Digital thermometer display	•
Adjustable shelves (Black Color): 1 Pcs	•
N.4 Adjustable feet	•
Energy efficiency class: E	•

PRODUCT DIMENSIONS

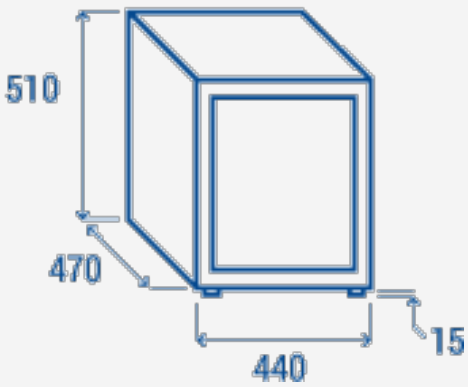

TECHNICAL SPECIFICATIONS

Capacity	**55 L**
Temperature	**+2° ~ +10°C**
Consumption	**0.8 kWh/24h**
Rated Power	**70 W**
Noise level	**0 dB(A)**
Net Weight	**17 Kg**
Gross Weight	**18 Kg**
External Dimensions (WxDxH mm)	**440x470x525**
Internal Dimensions (WxDxH mm)	**360x400x410**
Packaging dimensions (WxDxH mm)	**460x515x540**
Loading quantities 20'/40'/40'HQ	**220/440/550**

CERTIFICATION

CE RoHS

COOL HEAD EUROPE
We make the world a cooler place

www.coolheadeurope.com